SPECIFICATIONS
Rated Current:0.75AMP
Contact Resistance:30mΩ Max
Withstand Voltage:500V AC/DC
Insulation Resistance:1000MΩ Min
Operation Temperature:−40°c to +105°c

Contact Material:Phosphor Bronze
Contact Plating:Au or Sn Over Ni
Insulator Material:Polyester(UL94V−0)
Standard: LCP
Max.Processing Temp: 240°C for 30−60 seconds
(260°C for 10 seconds)

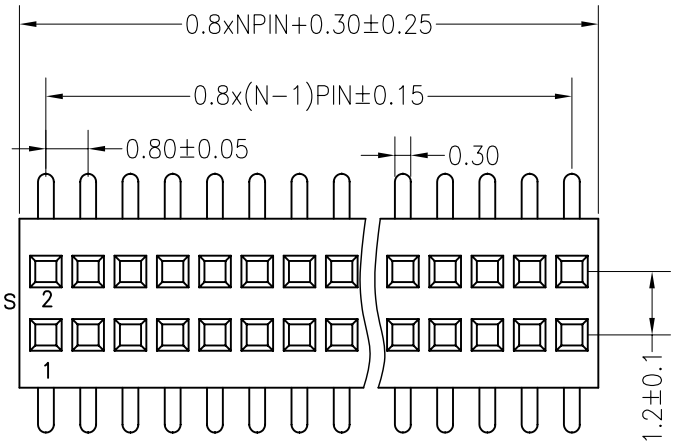

Recommended P.C.B Layout(Top Side)
(PCB BOARD TOLERANCE±0.05)

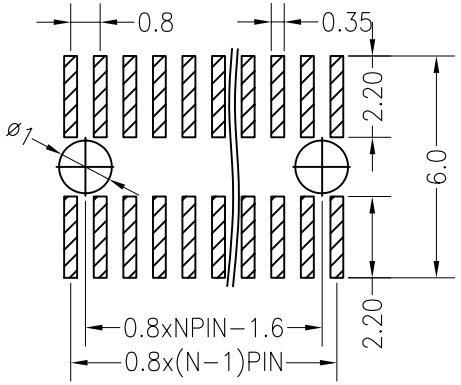

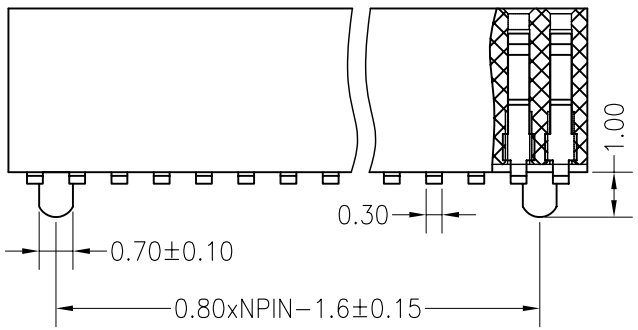

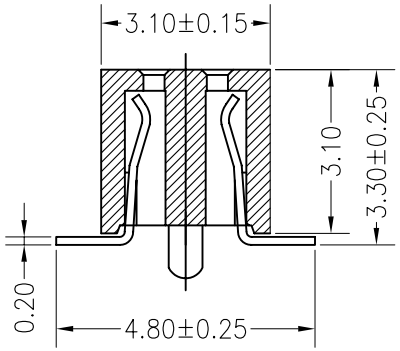

W= With Post

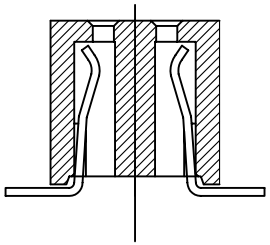

N= W/O Post

Ordering Information

2731 02 XX X X XX M U 01

- XX: No.of Pins Per Row 2*50
- X: Insulator Material Option
  - A=BK−PBT
  - B=BK−PA66
  - C=BK−PA6T
  - D=BK−PA46
  - F=BK−LCP
- X: Post
  - W=With Post
  - N=W/O Post
- XX: Contact Plating
  - G0:Gold Flash
  - G2:5U" Gold
  - G3:10U" Gold
  - G4:15U" Gold
  - G5:30U" Gold
  - S0:Gold Flash/Tin
  - SN:Tin

REV	DATE	MODIFICATION DESCRIPTION	CHANGE
A0	2012.03.28	NEW DRAWING	

OPERATION					
X.X	±0.30	DRAW	YiYuSheng	12.03.28	
X.XX	±0.20	CHECK			
X.XXX	±0.10				
Angle	±3°	APPROVE			
DIM	TOL				

SCALE	FIT
UNIT	mm
SIZE	A4
SHEET	1/1
PROJ.	

深圳市山谷道电子有限公司
电话：0755-27759859
传真：0755-27759850

PART NO.	273102XXXXXXMU01
TITLE:	0.8PF 2xNPin H3.10 SMT